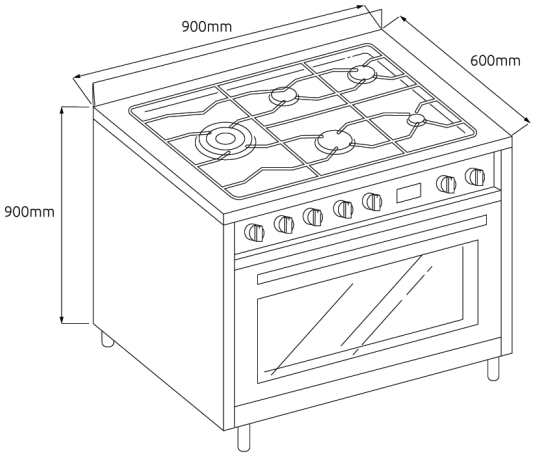
900mm
600mm
900mm

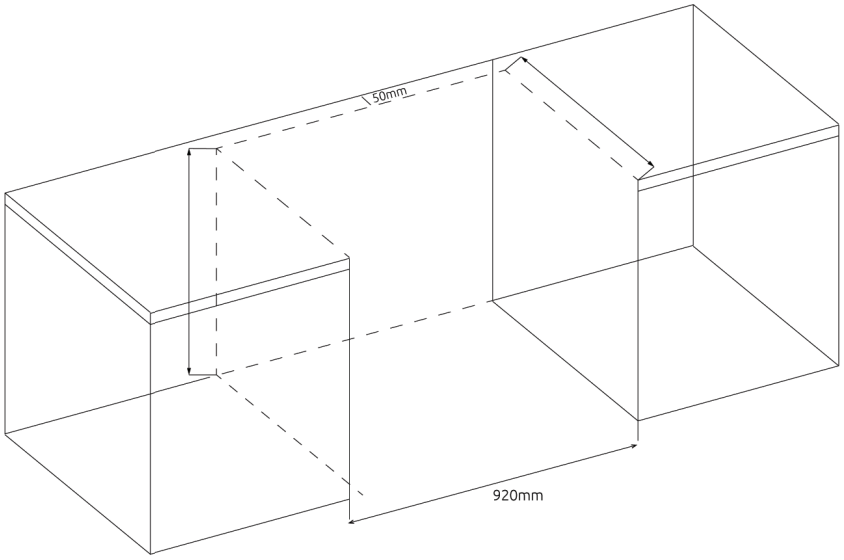
50mm
920mm