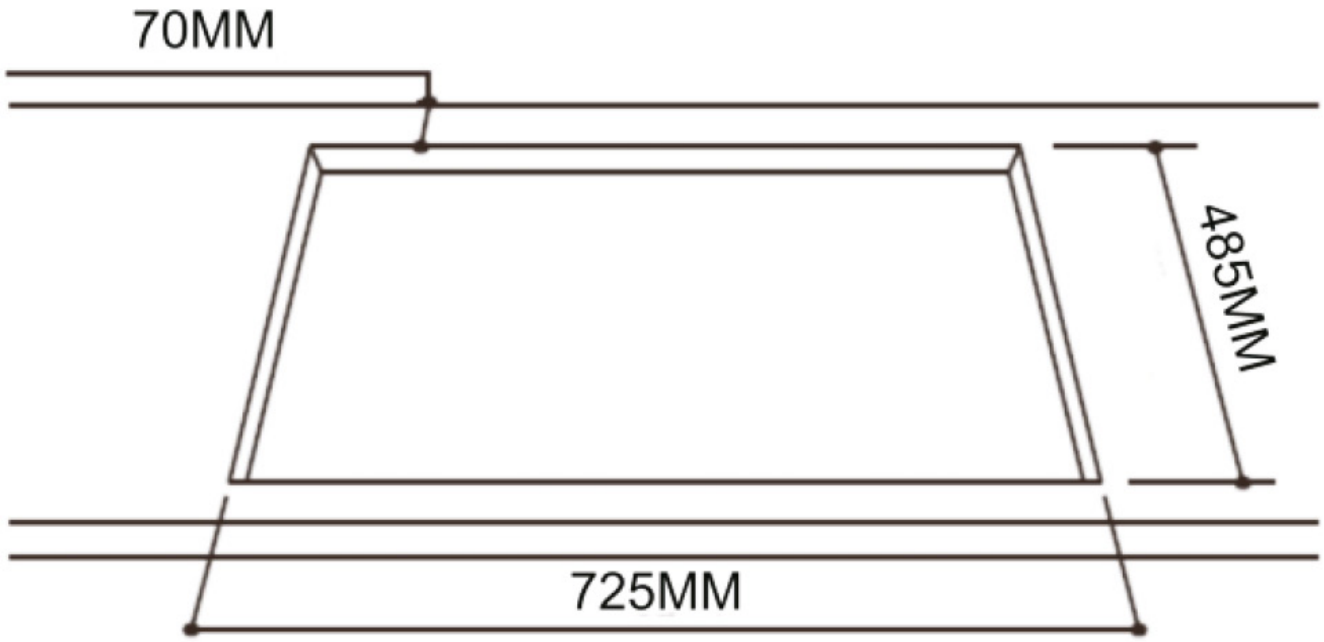
70MM
485MM
725MM